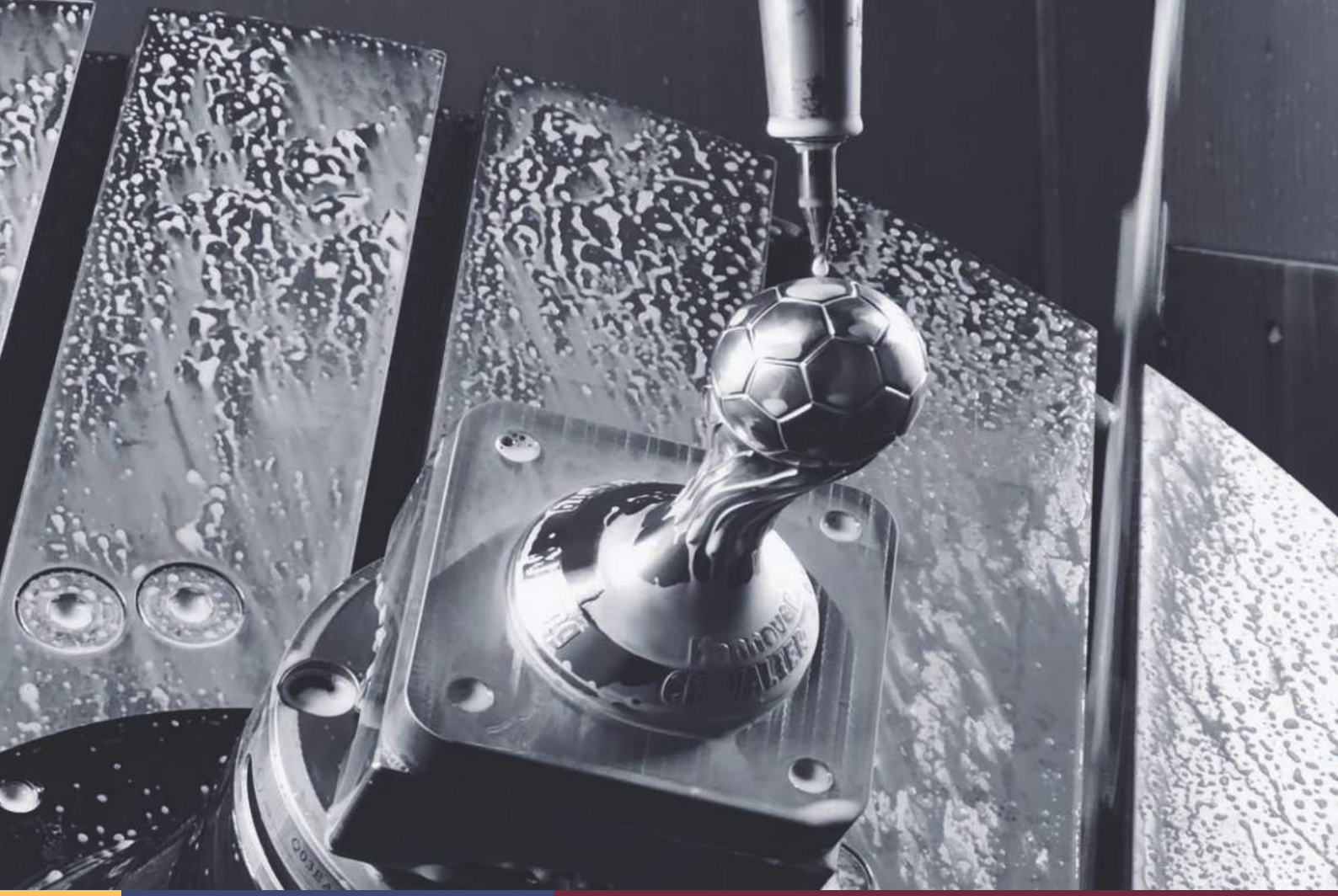

UNi5X-400

5-Axis Vertical Machining Center

Expertly engineered for complex-shaped workpieces

CHEVALIER®
Grinding / Turning / Milling

We shape your ideas.™

The UNi5X-400
5-Axis Vertical Machining Center

Chevalier's UNi5X Series of 5-axis VMCs provides the stability, speed and accuracy you require while machining complex workpieces. To achieve this, we built a rigid infrastructure for optimal stability and incorporated a BIG-PLUS® spindle design for superior speed and precision.

Our exclusive iMachine Communications System™ (iMCS) software provides remote machine monitoring, data analysis, alarm history and maintenance updates for overall equipment effectiveness (OEE).

And to ensure the affordable UNi5X Series VMCs will continue to operate efficiently for years to come, we back them with our no-nonsense standards and legendary service for reliable performance.

Finally, a 5-axis VMC that's affordable

Key Features and Benefits

The UNi5X-400, a 5-axis vertical machining center with a 2-axis rotary table, is engineered for machining complex-shaped workpieces.

1—Improves part accuracy by eliminating the need to move workpieces to multiple workstations.
2—Eliminates the need for special cutting tools.
3—Machines in a single pass instead of many small incremental passes to improve the surface and present better machining quality.
4—Increases tool cutting length while maintaining the same cutting feed rate to reduce cutting forces and increase tool life.
5—Requires fewer machines in use to save shop floor space and simplify machining management.
6—Decreases machining costs and increases productivity.
7—Offers iMCS for IoT readiness for 24/7 productivity.
8—Legendary Chevalier service.

Note: Machine shown with optional accessories.

Accommodates various complex shapes and high-precision parts or molds machining to save costs

Machine Construction

Machining precision depends on a rigid, stable infrastructure to eliminate vibrations. The UNi5X-400 VMC achieves superior stability by constructing the main structure (base, table, column, saddle) of high-quality, dense cast iron. Precision is further enhanced by using pretensioned Class C3 ballscrews in all three axes. Servo motors directly coupled to the ballscrews increase movement sensitivity while dramatically reducing backlash.

Heavy-duty construction for superior stability

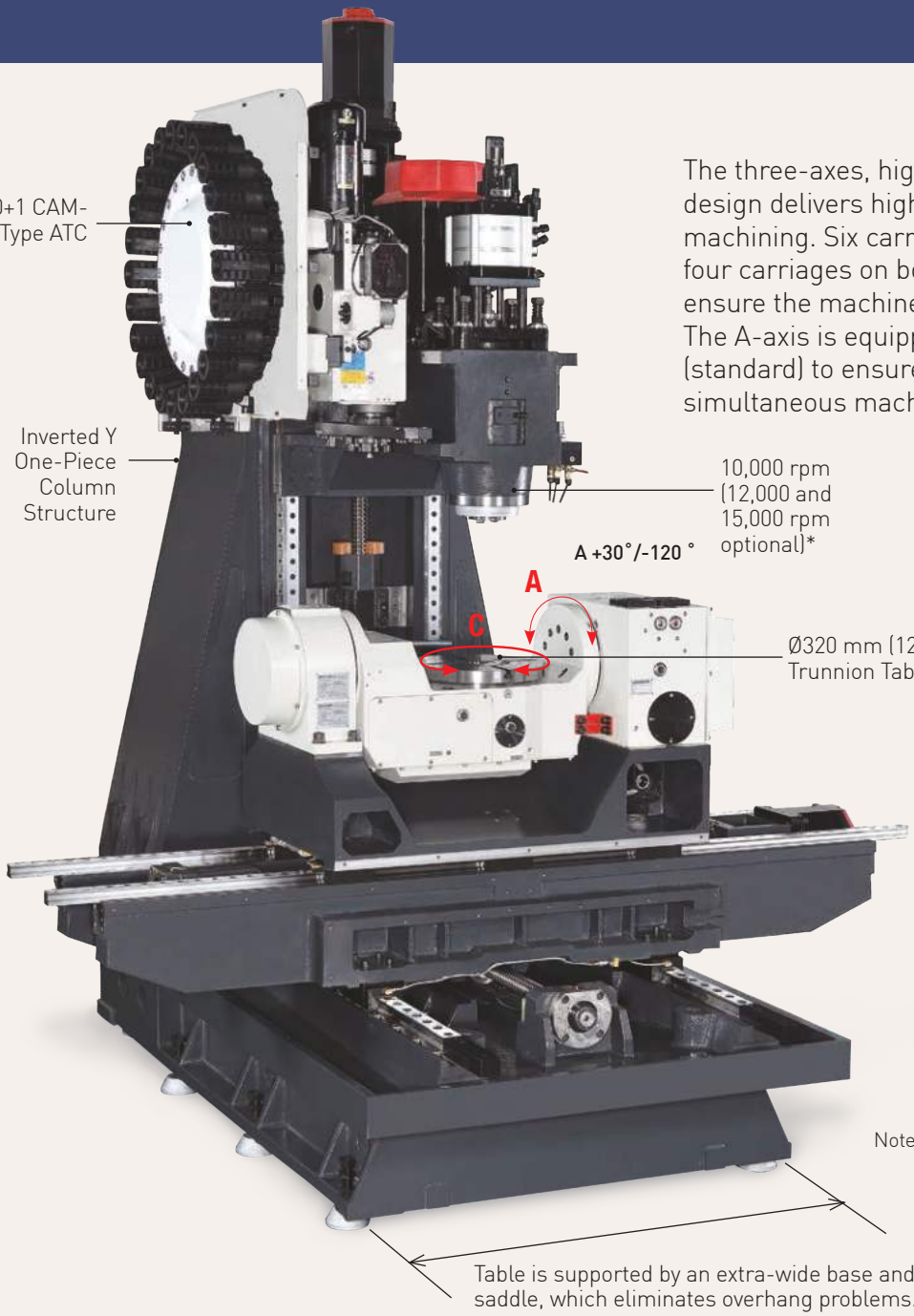

The three-axes, high-precision linear guideway design delivers high-rigidity and high-precision machining. Six carriages on the X-axis and four carriages on both the Y-axis and Z-axis ensure the machine's stability and accuracy. The A-axis is equipped with absolute encoders (standard) to ensure precise, complex 5-axis simultaneous machining.

- The high-rigidity direct drive spindle outputs torque up to 95.5 N-m.
- The compact 30/40 magazine saves space and is driven by a servo motor to make automatic tool changing fast and precise.
- The control position and swivel are ergonomically designed to make operating and monitoring machining status easy.

*U.S.A.: 12,000 rpm standard (15,000 rpm optional).

Note: Machine shown with optional accessories

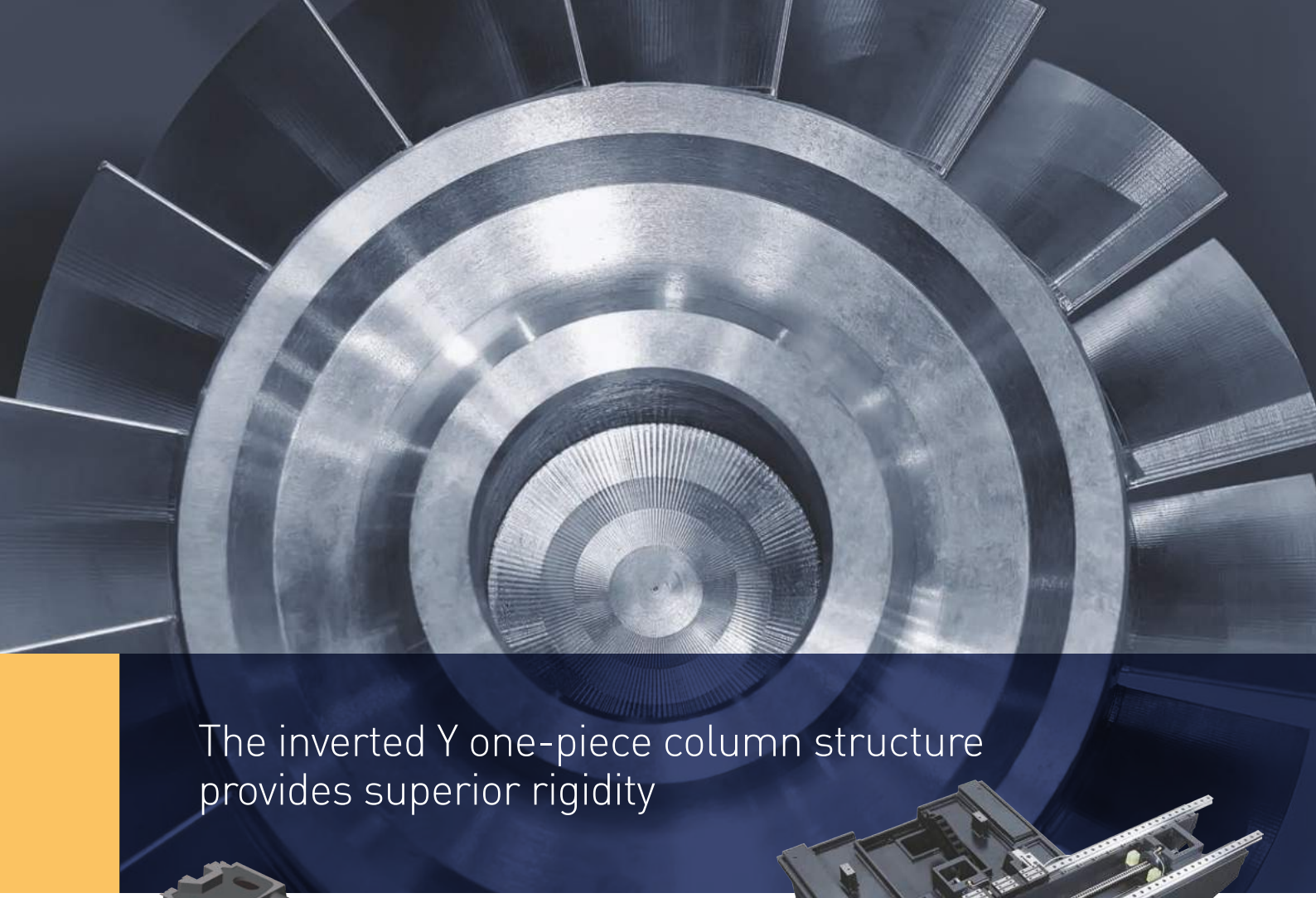

The inverted Y one-piece column structure provides superior rigidity

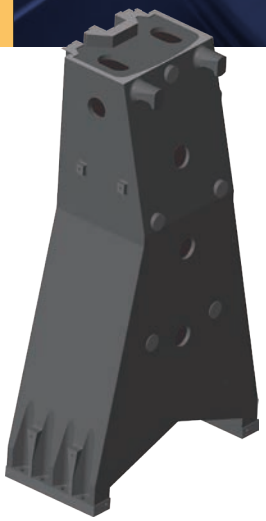

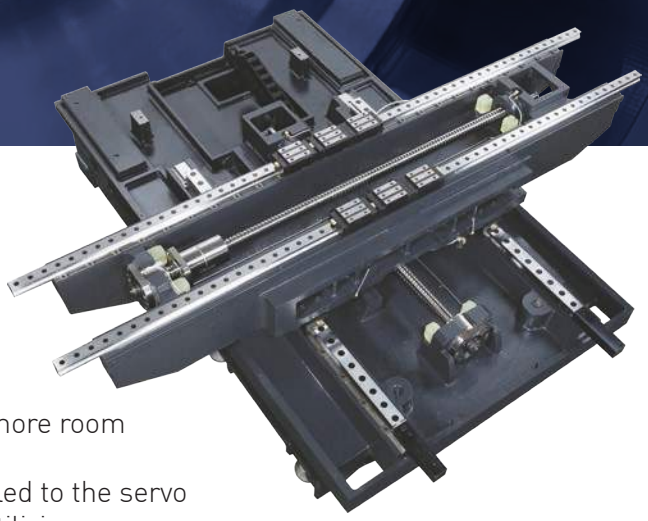

Rugged axis power transmission and accurate motion control

- Inverted Y-axis travel provides more room for machining wider parts.
- All linear axes are directly coupled to the servo motors with the X- and Y-axis utilizing a one-piece casted bearing block to reduce vibration and backlash.
- Standard roller guideways in all three axes.

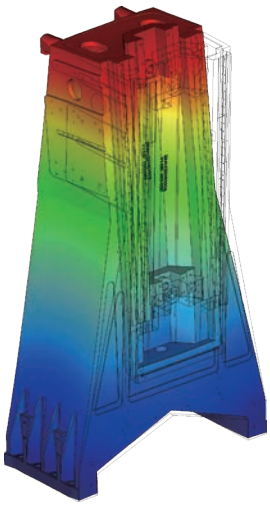

Topology analysis and Finite Element Method (FEM)

Simulation uses topology analysis and FEM methods to calculate the machine's displacements and stresses from operational loads (such as forces and pressures) to ensure superior stability and rigidity.

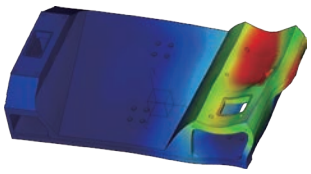

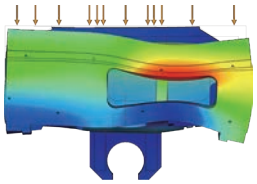

Spindle

The UNi5X-400 delivers superior accuracy during high-speed machining. To achieve this, the 40-taper BIG-PLUS® spindle design uses four P4 Class, high-precision angular-contact ball bearings to increase spindle rigidity and loading capacity. It also reduces vibration, noise and thermal expansion.

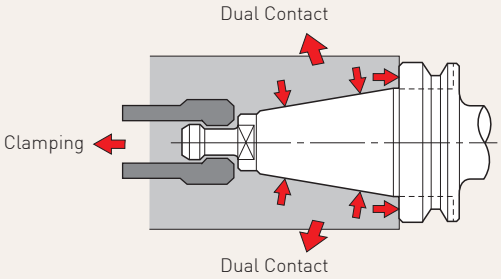

Taper Dual Contact Spindle

Spindle	
Spindle taper	#40 BIG-PLUS®
Spindle speed	10,000 rpm (12,000/15,000 rpm optional)*
Transmission type	Direct drive
Spindle diameter	Ø70 mm (2.8")

*U.S.A.: 12,000 rpm standard (15,000 rpm optional).

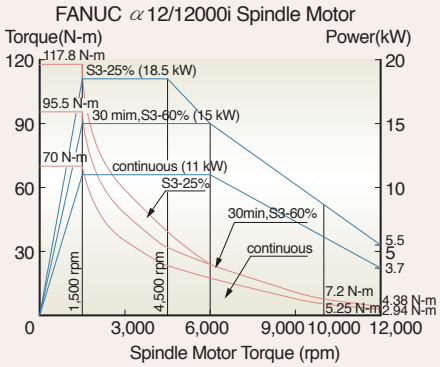

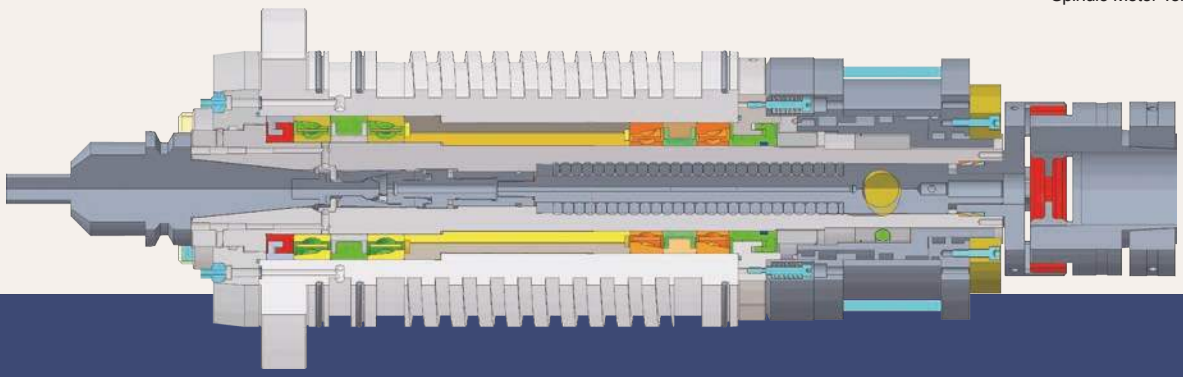

The rigid spindle reduces vibration to ensure greater accuracy

Efficient chip disposal design

The automatic chip flushing system moves cutting chips to either side of the machine base. The screw-type chip conveyor delivers cutting chips to the chip conveyor (optional) located at the front of the machine base.

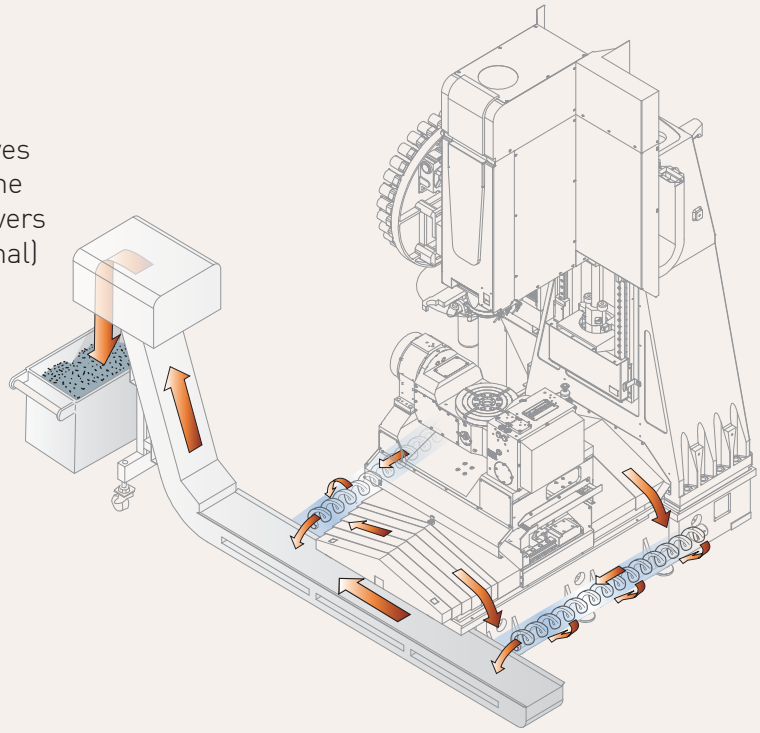

5-axis, machine tool dynamic accuracy measurement and compensation system

This technology measures and compensates the static/dynamic backlash of the transmission and rotary axes. For static backlash calibration, the error of transmission axis can be compensated to 1 μm and the rotary axis static backlash error can be compensated to 0.001°.

Trunnion table

A heavy-duty three-piece cross roller bearing provides excellent part loading and machining capability. There is ±10" angle encoder for the A-axis.

Item	A-axis Tilting	C-axis Rotation
Max. table load	100 kg (220 lbs.)	
Diameter of center hole	Ø50 (H7) mm	
Positioning accuracy	12 sec.	20 sec.
Repeatability accuracy	5 sec.	10 sec.
Min. setting angle	0.001°	
Revolutions per minute	25 rpm	
Break tightening force	140 kg-m	70 kg-m
Braking pressure (air source)	5 kgf/cm^2	

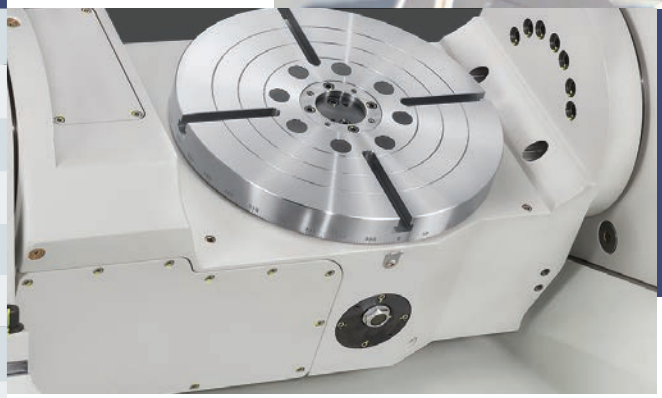

Maximum working area and loading

Allowable Loading Capacity		Allowable Work Movement	Allowable Loading (when table clamped)		
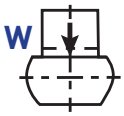	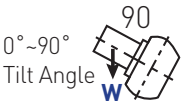	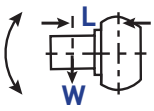	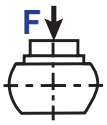	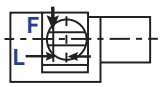	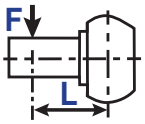
100 Kg	100 Kg	100 N-m	16,000 N-m	700 N-m	1,400 N-m

Units: mm (")

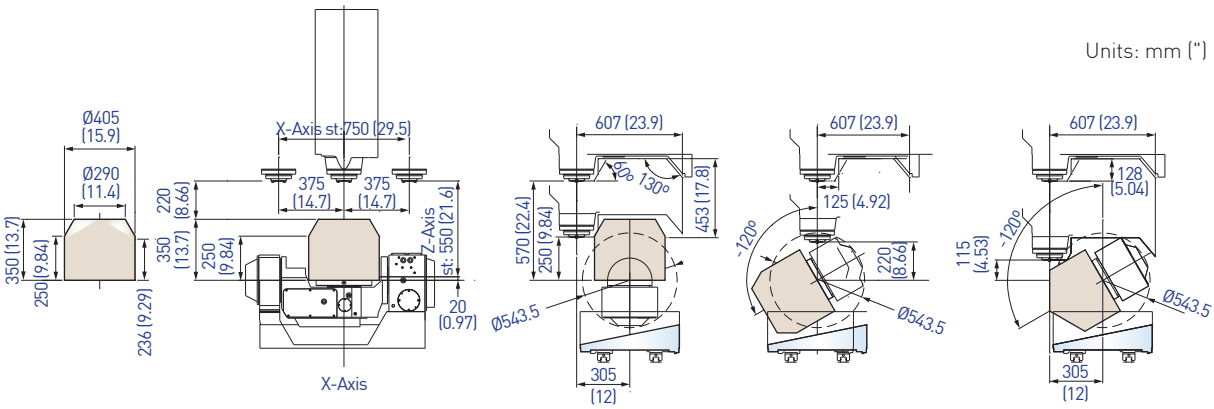

Control

Control specifications

- Standard Fanuc 0iM control for 4+1 axis applications
- 4-axis simultaneous control
- Part program storage length: 1Mb
- Manual Guide i
- 10.4" color LCD
- Tilted working plane indexing G68.2

Optional controls

- Siemens 828D control: 10.4" TFT LCD color monitor (4-axis simultaneous)
- Fanuc 31iB-5: 10.4" TFT color monitor (5-axis simultaneous)
- Heidenhain TNC640 HSCI: 15" TFT LCD color monitor (5-axis simultaneous)

iMachine Communications System™ (iMCS) software

Equipped with iMCS for remote data collection and data tracking from mobile devices anywhere in the world. The software identifies and reports productivity lags 24/7 and anticipates potential issues to prevent costly downtime. Additional PCs and software are needed.

Trunnion Table and T-Slot Dimensions

Units: mm (")

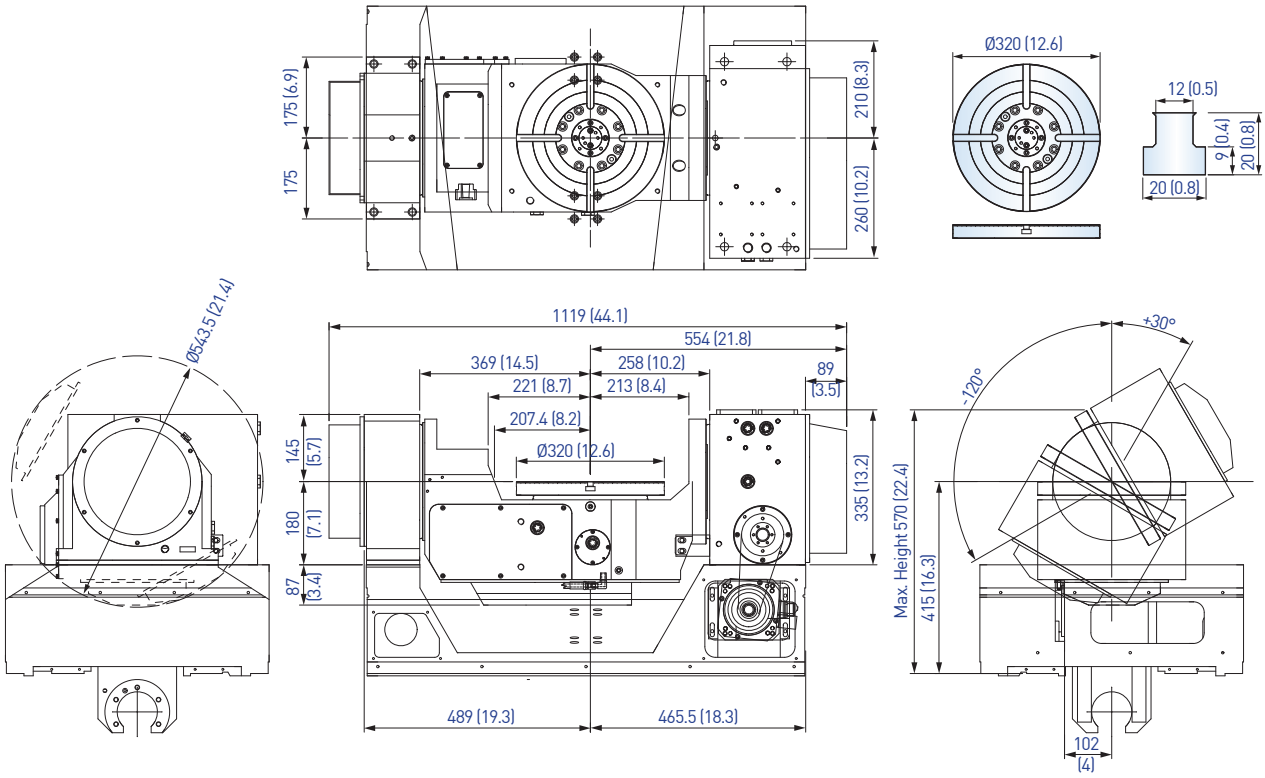

View Tilting Angle Range

Machine Dimensions

Units: mm (")

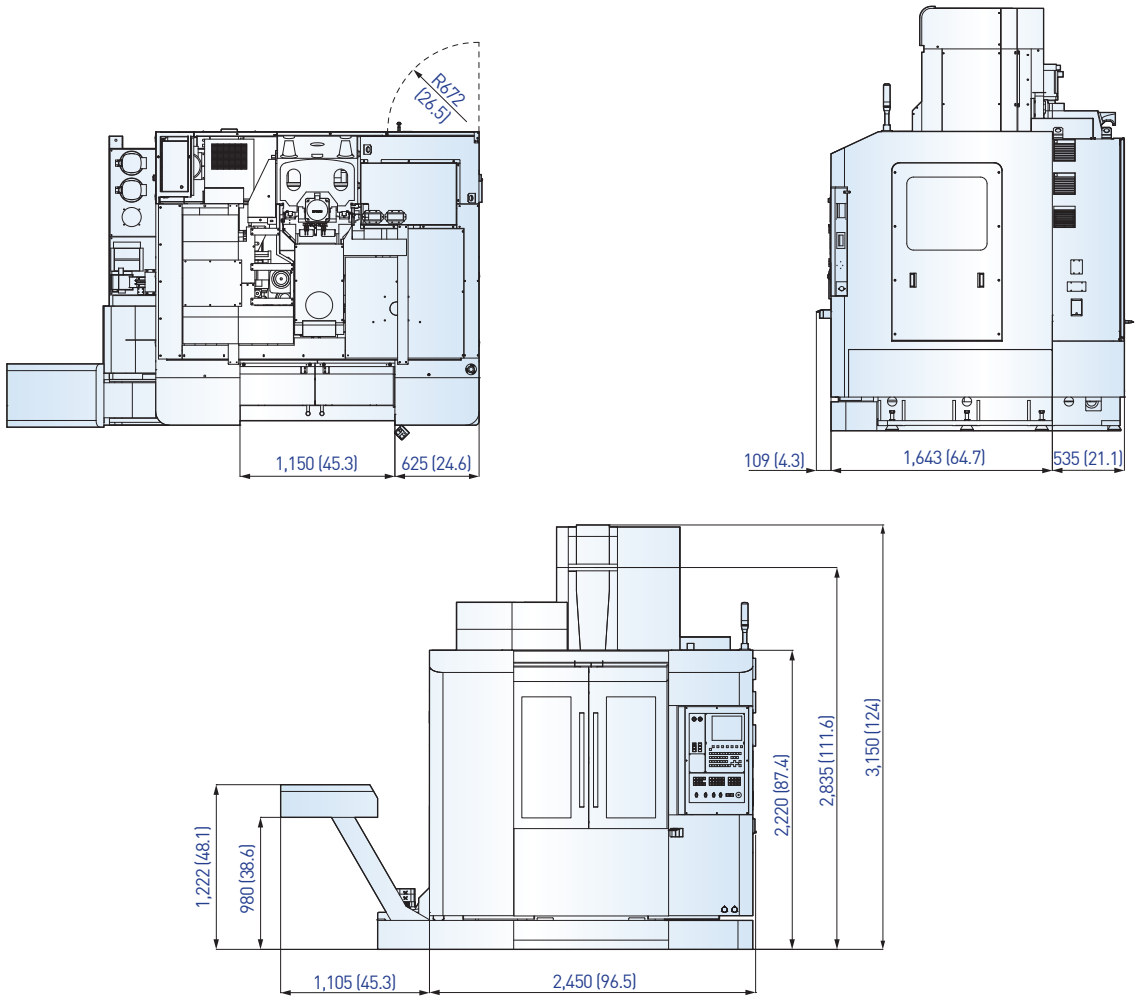

Applications

Workpiece	Cutting Material	Tool	Cutting Mode	Speed (rpm)	Feed Rate (mm/min)	Total Time
Vibration plate Ø200 x 30 mm	AL-7075	EDM 10 EDM 8 EDM 5 EDM 10 EDM 8 EDM 6 DR 2.6 DR 3.4	Rough Rough Rough Finish Finish Finish Drill Drill	11,141 11,931 12,732 12,732 13,926 14,854 2,500 2,000	3,342 3,851 3,674 2,292 2,507 2,228 160 160	00:50:40

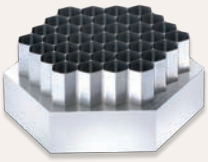

Workpiece	Cutting Material	Tool	Cutting Mode	Speed (rpm)	Feed Rate (mm/min)	Total Time
Honeycomb 100 x 100 x 40 mm	AL-6061	EDM 10 DR 10 EDM 4 EDM 4	Rough Rough Rough Finish	8,000 2,000 8,000 10,000	2,400 80 1,200 1,000	01:21:57

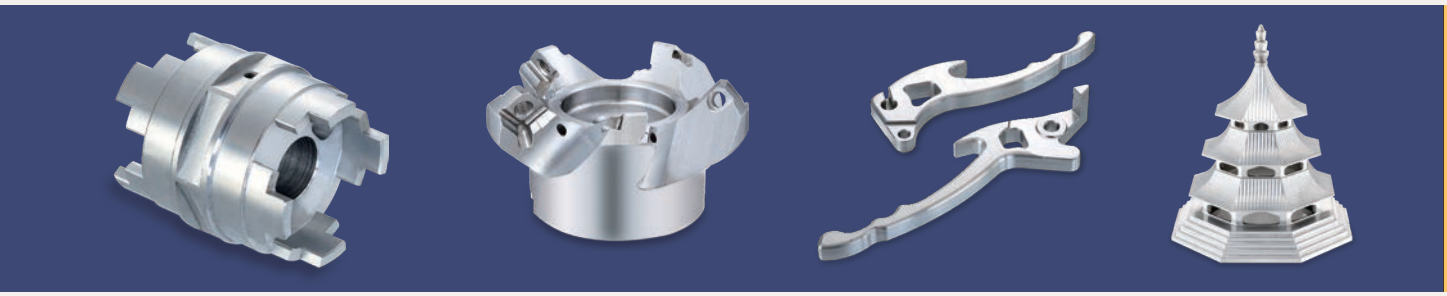

Accessories

Standard accessories

1. Direct-drive spindle (10,000 rpm)*
2. Spindle air seal
3. Cutting blast
4. Spindle oil chiller
5. Fanuc 0iM control**
6. 10.4" TFT monitor
7. User-friendly control panel
8. Remote MPG
9. RS232 / USB Interface / Ethernet / PCMCIA
10. Fully enclosed
11. 3-axis telescope cover
12. 30+1 arm type ATC
13. A-axis angle encoder (±10")
14. Automatic way lubrication system
15. Pneumatic system
16. Rear chip flush system
17. Electric cabinet power indication lamp
18. Air gun and water gun
19. LED work lamp and 3 color warning lamp
20. Coolant system
21. Tool box
22. Leveling bolts and pads
23. Wireless receiver for workpiece measurement system (Blum)

*U.S.A.: 12,000 rpm standard.
**U.S.A.: standard control

Optional accessories

1. Direct-drive spindle (12,000 and 15,000 rpm)*
2. High-pressure coolant through spindle
3. 40-station, chain type ATC
4. 3-axes linear scales
5. A/C-axis angle encoder (±5")
6. Workpiece measurement system
7. Tool length measurement
8. Internal dual-screw chip augers
9. Lift-up chip conveyor
10. Oil skimmer
11. Oil mist collector
12. Air conditioner for electric cabinet
13. Transformer
14. Siemens 828D control: 10.4" TFT LCD color monitor (4-axis simultaneous)
15. Fanuc 31iB-5: 10.4" TFT LCD color monitor (5-axis simultaneous)
16. Heidenhain TNC640 HSCI: 15" TFT LCD color monitor (5-axis simultaneous)

*U.S.A.: 15,000 rpm optional.

Specifications

Item	Description	UNi5X-400
Capacity	Table size Workpiece dimensions Max. table load	Ø320 mm (Ø12.6") Ø400 x H350 mm (Ø15.7" x H13.7") 100 kg (220 lbs.)
Travel	X-travel Y-travel Z-travel	750 mm (29.5") 610 mm (24") 550 mm (21.7")
Feed rates	Rapid traverse (X/Y/Z) Cutting feed (X/Y/Z)	36/36/30 m/min (1,417/1,417/1,181 ipm) 10/10/10 m/min (394/394/394 ipm)
Accuracy	VDI 3441 positioning accuracy (X/Y/Z) VDI 3441 repeatability accuracy (X/Y/Z) A-axis positioning C-axis positioning (while with optional angle encoder) A-axis repeatability C-axis repeatability (while with optional angle encoder)	0.010 mm (0.0004") 0.007 mm (0.0003") 12 sec. 20 (12) sec. 5 sec. 10 (4) sec.
A/C-axis	A-axis (tilting) C-axis (rotating) Revolutions per minute	150° (+30° / -120°) 360° 25 rpm
Spindle	Spindle taper Spindle power Spindle speed Pull stud Spindle center to column Spindle nose to table surface	BBT40 Fanuc: 11/15 kW, Siemens: 11 kW, Heidenhain: 10 kW Direct drive 10,000 rpm (optional 12,000/15,000 rpm)* P40T-1 685 mm (27") 20~570 mm (0.8" ~ 22.4")
Automatic tool changer	Tool storage capacity Max. tool diameter with adjacent tool Max. tool diameter without adjacent tool Max. tool length Max. tool weight	30+1 arm type ATC 76 mm (3") 150 mm (5.9") 300 mm (11.8") 7 kg (15.4 lbs.)
Tank capacity	Coolant tank capacity	570 L (150 gals.)
Power and air requirement	Power required	Fanuc: 25 kVA, Siemens/Heidenhain: 29 kVA
	Total air consumption — Pressure	6 kg/cm^2 (86 psi)
	Total air consumption — Flow	200 NL/min (7 cfm)
Machine dimensions	Floor space (W x D x H) Net weight	2,450 x 2,287 x 3,150 mm (96.5" x 90" x 124") 7,050 kg (15,510 lbs.)

All content is for reference only and may be subject to change without notice or obligation.
*U.S.A.: 12,000 rpm standard (15,000 rpm optional).

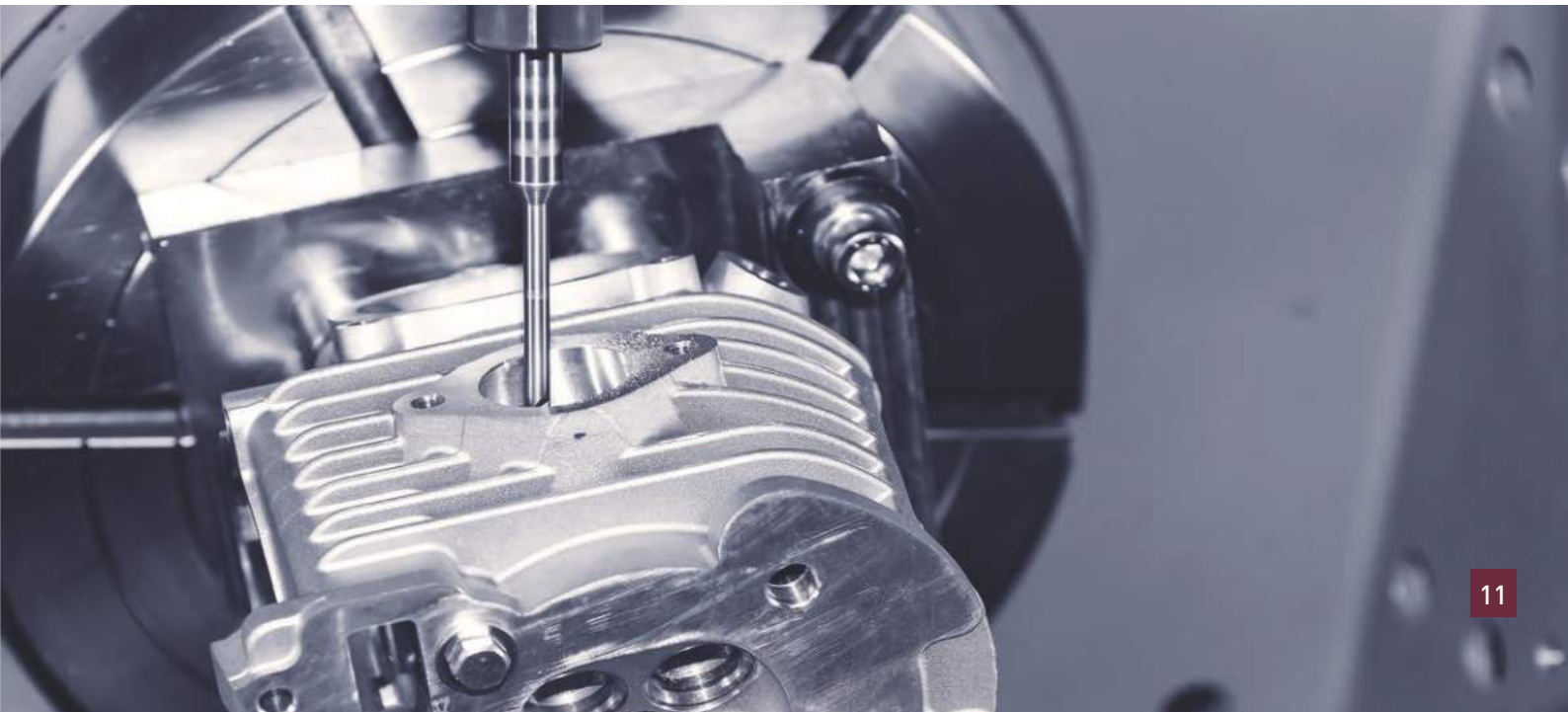

Grinding Machines

SMART Grinding Machines

Turning Machines

Milling Machines

CHEVALIER®
Grinding Turning Milling
We shape your ideas.™

Headquarters
FALCON MACHINE TOOLS CO. LTD.
No. 34, Hsing Kong Road, Shang Kang, Chang Hua
TAIWAN 50971
Tel: +886 4 799 1126 Fax: +886 4 798 0011
www.chevalier.com.tw
overseas@chevalier.com.tw

U.S.A. Headquarters
CHEVALIER MACHINERY INC.
9925 Tabor Place, Santa Fe Springs, CA 90670 U.S.A.
Tel: (562) 903 1929 Fax: (562) 903 3959
www.chevalierusa.com
info@chevalierusa.com

UNi5X-400_EN_201908/1000P1/@RW

TAF Quality Management QC021 IAF QMS 010 MIRDC ISO 9001 CE